REVISIONS		
REV.	DESCRIPTION	DATE

SPECIFICATIONS:

* PLUG BOX SHALL BE 12"W X 5"H X 3.5"DEEP
* FABRICATED OF EXTRUDED ALUMINUM
* CONDUIT KNOCK-OUTS ON BOTH ENDS
* NUMBERS ARE 5/8" WHITE DIE CUT CHARACTERS
* (3) 520 FLUSH RECEPTACLES
* SEMI-GLOSS BLACK POWDER COAT FINISH
* GROUND LUG INSTALLED

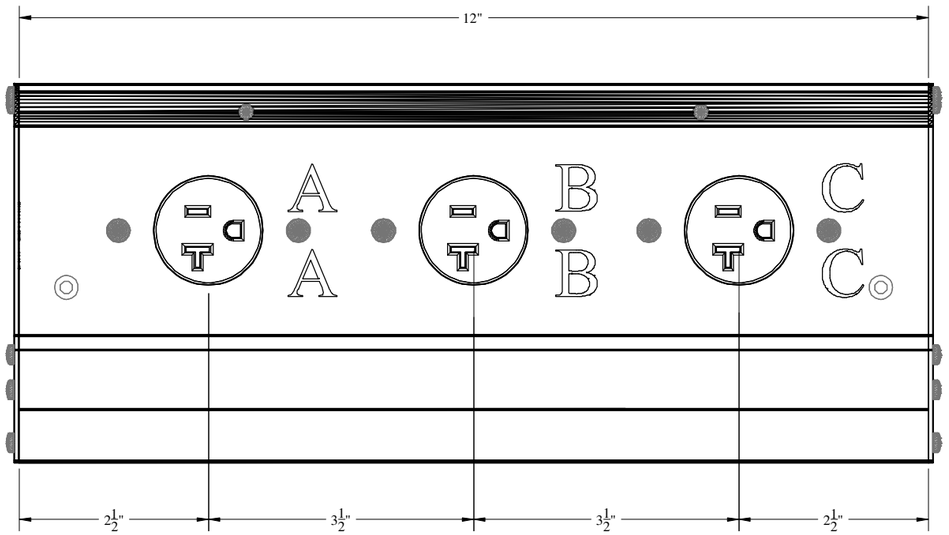

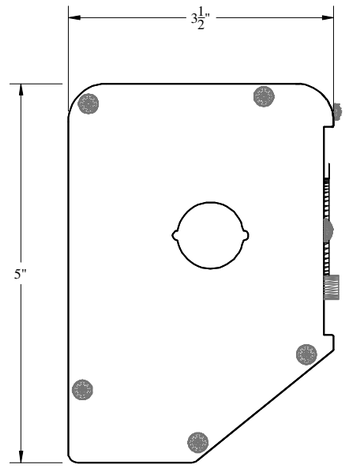

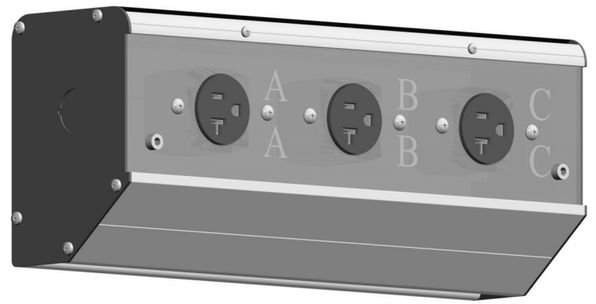

Type:			
Quantity:			
Brackets:			
Device Name	Circuit Numbers		
---	AA	BB	CC

E118218

CONTRACT NO: PB-CS		**Rigging Innovators, Inc.** San Antonio, Texas
CATALOG: PB-CSE12-3		
DRAWN BY: CADD	03/04/2009	TITLE: Plug Box - (3) 520 Flush Receptacles
CHECKED BY:		
DESIGNED BY:		SIZE A3 · DATE 03/04/2009 · DRAWING NO: PB-CSE12-3F · REV. -
(C) R.I.,Inc. 2009		SCALE: NONE · SHEET: 1 OF 1