REVISIONS		
REV.	DESCRIPTION	DATE

SPECIFICATIONS:

** PLUG BOX SHALL BE 12"W X 5"H X 3.5"DEEP*
** FABRICATED OF EXTRUDED ALUMINUM*
** CONDUIT KNOCK-OUTS ON BOTH ENDS*
** NUMBERS ARE 5/8" WHITE DIE CUT CHARACTERS*
** (3) L520 18" TYPE SO PIGTAILS INSTALLED*
** CONTRACTOR WIRESS TO DEVICE TERMINALS*
** HEYCO STRAIN RELIEF PROTECTION*
** SEMI-GLOSS BLACK POWDER COAT FINISH*
** GROUND LUG INSTALLED*

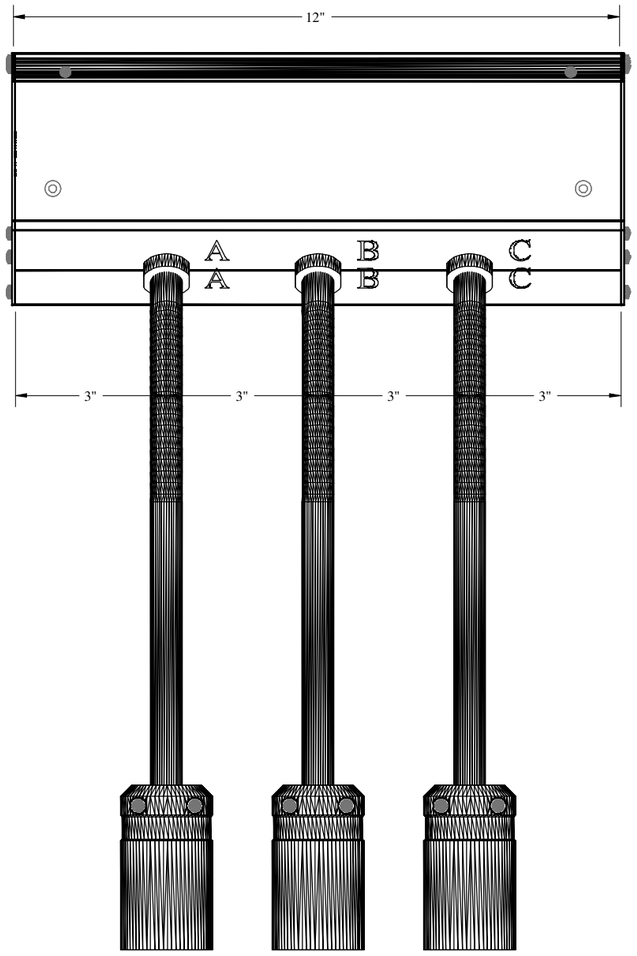

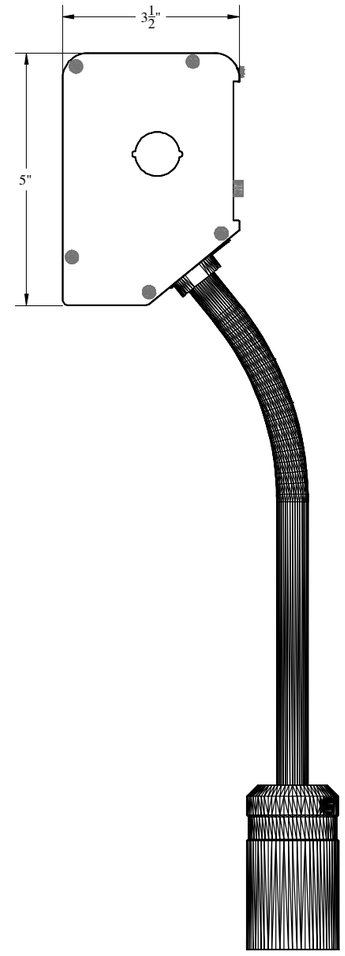

Type:			
Quantity:			
Brackets:			
Device Name	Circuit Numbers		
---	AA	BB	CC

E118218

CONTRACT NO: PB-CS		**Rigging Innovators, Inc.** San Antonio, Texas
CATALOG: PB-CSE12-3		TITLE: **Typical Plug Box**
DRAWN BY: CADD	03/04/2009	**Plug Box - (3) L520 18" Pigtails**
CHECKED BY:		SIZE **A3** / DATE 03/04/2009 / DRAWING NO: **PB-CSE12-3C** / REV. **-**
DESIGNED BY:		
(C) R.I.,Inc. 2009		SCALE: NONE / SHEET: 1 OF 1