REVISIONS		
REV.	DESCRIPTION	DATE

SPECIFICATIONS:

** PLUG BOX SHALL BE 8"W X 5"H X 3.5"DEEP*
** FABRICATED OF EXTRUDED ALUMINUM*
** CONDUIT KNOCK-OUTS ON BOTH ENDS*
** NUMBERS ARE 5/8" WHITE DIE CUT CHARACTERS*
** (2) 2P&G FLUSH RECEPTACLES*
** SEMI-GLOSS BLACK POWDER COAT FINISH*
** GROUND LUG INSTALLED*

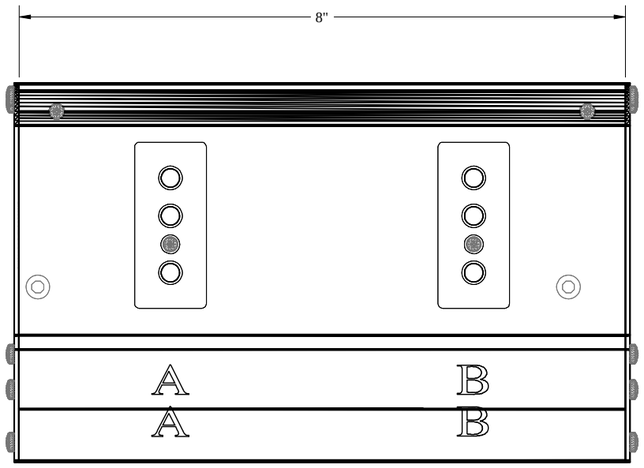

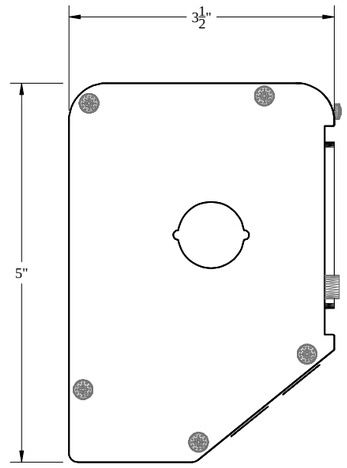

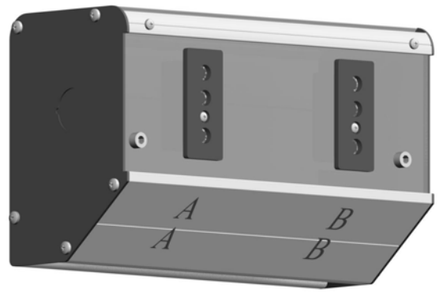

Type:		
Quantity:		
Brackets:		
Device Name	Circuit Numbers	
---	AA	BB

E118218

CONTRACT NO: PB-CS		**Rigging Innovators, Inc.** San Antonio, Texas
CATALOG: PB-CSE08-2		
DRAWN BY: CADD	03/04/2009	TITLE: Plug Box - (2) 2P&G Flush Receptacles
CHECKED BY:		
DESIGNED BY:		SIZE A3 · DATE 03/04/2009 · DRAWING NO: PB-CSE08-2B · REV. -
(C) R.I.,Inc. 2009		SCALE: NONE · SHEET: 1 OF 1